

Hospitality and residences

“ONE STOP SHOP”

2Unique

FURNITURE & CONTRACT SOLUTIONS

Apresentação

PT

De Alcanena para o mundo, a 2Unique View é uma empresa focada na produção e revenda, de mobiliário e decoração, 100% portuguesa, para o sector da hotelaria e residencial.
Comercializamos uma gama alargada de produtos que vão desde: mesas, cadeiras, sofás, colchões, mobiliário diverso, iluminação, tapetes, têxtil variado e também mobiliário outdoor, tendo como conceito “one stop shop”.

Executamos projectos personalizados, de acordo com a preferência do cliente.
Temos dois showroom com os nossos produtos expostos para visita.

“ONE STOP SHOP”

turnkey solutions

Temos soluções “chave na mão” para habitações, hotéis, casas pré-fabricadas, navios, micro apartamentos e mobiliário feito à medida.

EN

From Alcanena to the world, 2Unique View is a company focused on the production and resale of furniture and decoration for the hotel and residential sector.
We sell a wide range of products ranging from: tables, chairs, sofas, mattresses, furniture, lighting, carpets, various textiles and also outdoor furniture, with the concept "one stop shop".

We execute all kinds of personalized projects, according to your preference.

We have a showroom with the products exposed for our customers.

FR

De Alcanena au monde entier, 2Unique View est une entreprise spécialisée dans la production et la revente de mobilier et de décoration pour le secteur hôtelier et résidentiel.
Nous commercialisons une large gamme de produits allant de : tables, chaises, canapés, matelas, meubles divers, éclairage, tapis, textiles variés et aussi meubles d'extérieur, ayant comme concept "one stop shop".

Nous réalisons tout type de projet personnalisé, selon vos préférences.

Nous disposons d'une salle d'exposition avec les produits exposés pour nos clients.

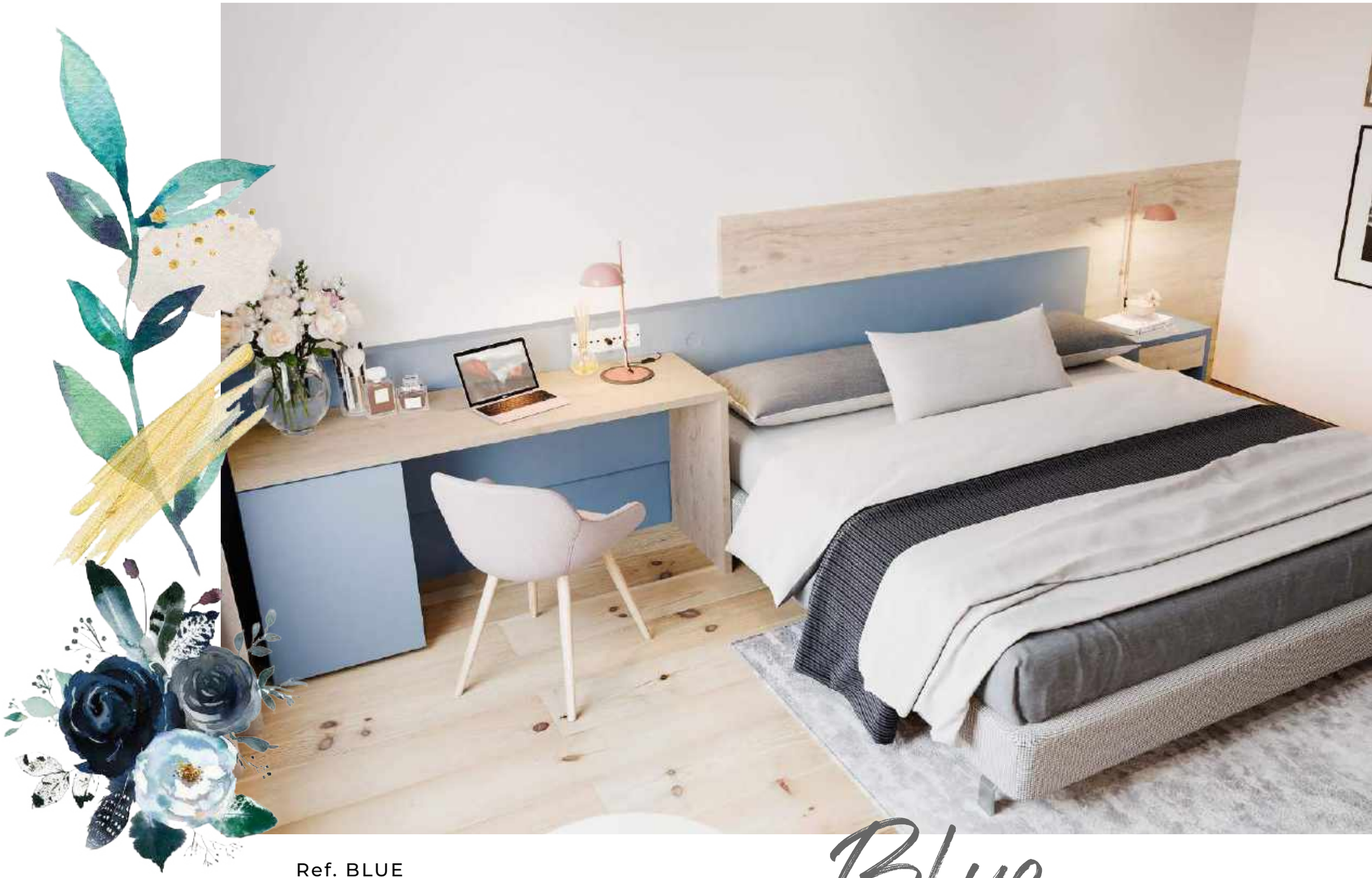

Ref. BLUE

Blue


Hotel
DAYTONA
MOOVE
META

Hotel





CAB. DAYTONA



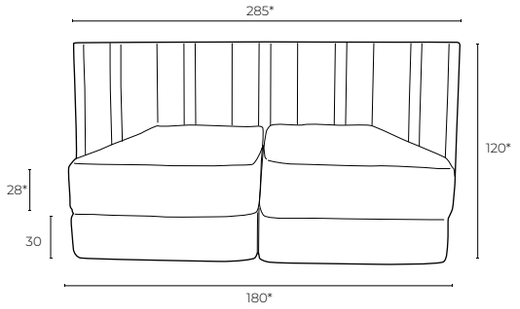

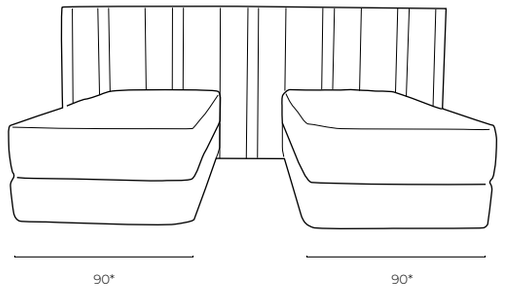

PT
Sommier - Estrutura metálica tubular 30x30 mm com tampo em MDF
Cantos redondos (versão hotel)
Pés metálicos cor preto (12 cm ou 8 cm - outros pés sob consulta)
Cabeceira - estrutura em madeira de pinho + MDF com sistema de fixação à parede (incluído)
Mesa de cabeceira - estrutura metálica com tampo em melamina (opção madeira maciça)

EN
Bed base - Tubular metal structure 30x30 mm with MDF top
Round corners (hotel version)
Metallic black feet (12 cm or 8 cm - other feet on request)
Headboard - Pine wood + MDF structure with fastening system to the wall (included)
Night stand - metallic structure with melamine top (solid wood in option)

FR
Sommier - Structure métallique tubulaire 30x30 mm avec plateau/couvercle en MDF
Coins arrondis (version hotel)
Pieds metalique couleur noir (12 cm ou 8 cm - autres mesures de pieds sur demande)
Tête de lit - structure en bois de pin + MDF avec système de fixation rapide au mural (inclus)
Table de chevet - Structure métallique avec plateau en melamine (bois massif en option)

*outras medidas sob consulta
other measures on request
autres mesures sur demande

Suite

Ref. SUITE



Ref. Golden

Ref. META cantos redondos

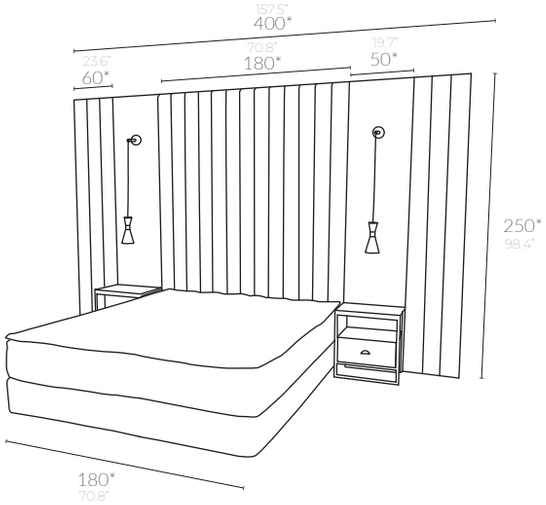

Suite











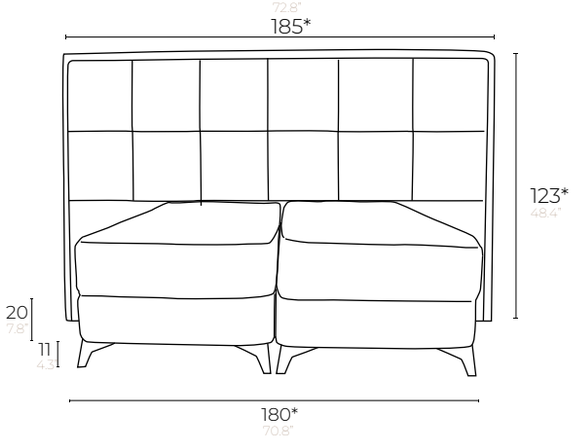

Monaco

Ref. MONACO





Elia

Ref. ELIA



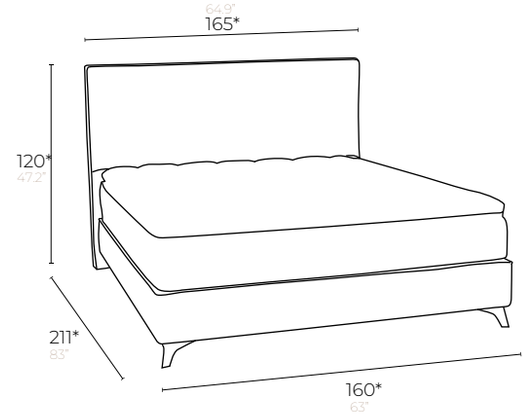



Mesas Cabeceira

bedside tables
tables de chevet

ref. GOLDEN



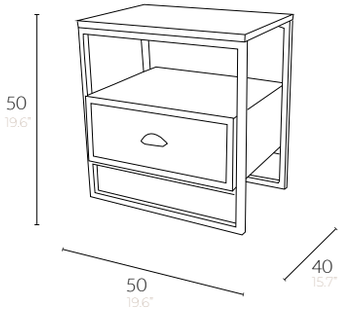

*outras cores sob consulta
*other colours on request
*autres couleurs sur demande

ref. SLIM



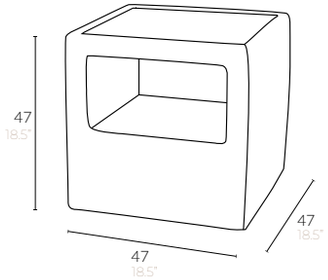

*disponível em todos os revestimentos
*available in all fabric collections
*disponible en tout les tissus

ref. CUBE



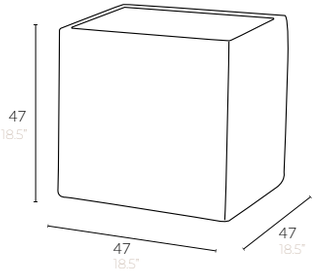

*disponível em todos os revestimentos
*available in all fabric collections
*disponible en tout les tissus

ref. MOOVE



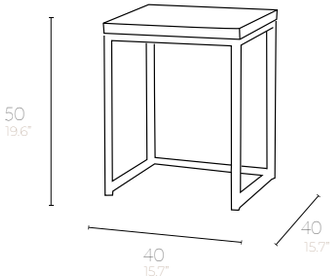

*outras cores sob consulta
*other colours on request
*autres couleurs sur demande

Tube



Ref. TUBE

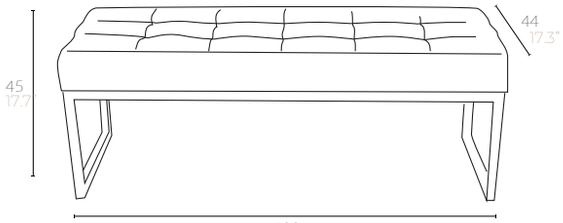

Lasso



Ref. LASSO

Banquetas

stools
bout de lit

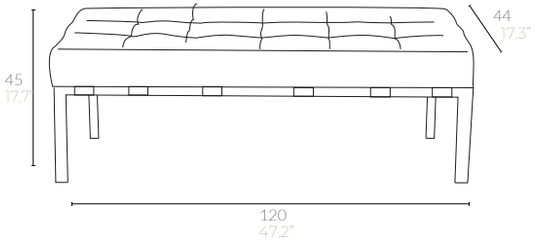

Art



Ref. ART

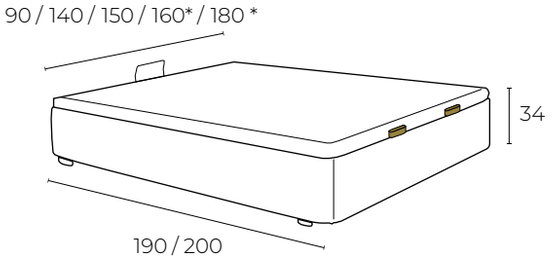

* Em opção dividido - Divided in option - Option divisé







Meta

Ref. META

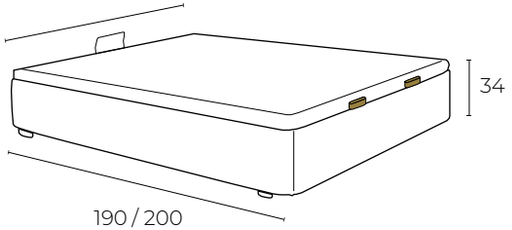

* Em opção dividido - Divided in option - Option divisé



sommiers

bedbase



Pino 14

Ref. PINO 14



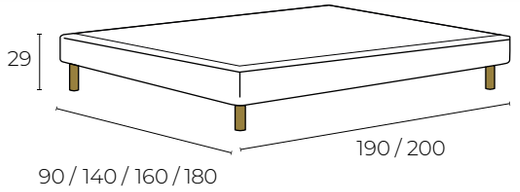

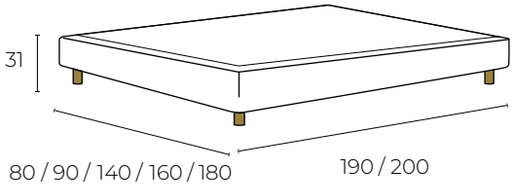





Pino 20

Ref. PINO 20

colchões
mattresses
matelas

34

Hotel collection
Collection d'hôtel

Première

2400 un

mola ensacada
pocket spring
ressorts ensachés
muelles ensacados

200 x 160





Tecido - Fabric - Tissu - Tejido stretch

Fibra- Fiber - Fibre

Visco elástico - Memory foam - Mousse memoire

TNT - Nonwoven - Tissu non tissu

Espuma - Foam - Mousse

Mola ensacada - Pocket spring - Ressorts ensachés - Muelles ensacados

Espuma - Foam - Mousse

Mola ensacada - Pocket spring - Ressorts ensachés - Muelles ensacados

TNT - Nonwoven - Tissu non tissu

Espuma - Foam - Mousse

Tecido - Fabric - Tissu - Tejido stretch

ADAPTABILIDADE . ADAPTABILITY
ADAPTABILITÉ . ADAPTABILIDAD
10

FIRMEZA . STRENGTH
FORCE . FUERZA
5

FRESCURA . FRESHNESS
FRAÎCHEUR
8

RESPIRABILIDADE . BREATHABILITY
RESPIRABILITÉ . TRANSPIRABILIDAD
9

90 X 190

140 X 190

150 x 200

160 X 200

180 X 200

* outras medidas sob consulta
other measures on request
autres mesures sur demande
otras medidas bajo pedido

28

Hotel collection
Collection d'hôtel



Excellency

ADAPTABILIDADE . ADAPTABILITY
ADAPTABILITÉ . ADAPTABILIDAD
9

FIRMEZA . STRENGTH
FORCE . FUERZA
9

FRESCURA . FRESHNESS
FRAÎCHEUR
8

RESPIRABILIDADE . BREATHABILITY
RESPIRABILITÉ . TRANSPIRABILIDAD
10

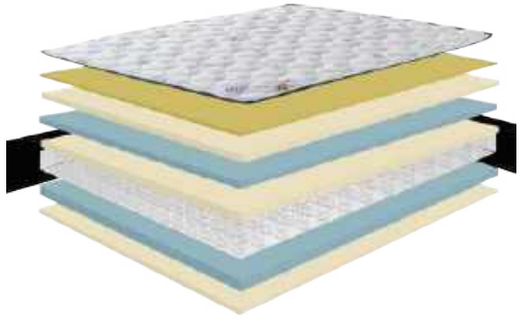

Ref. EXCELLENCY

Tecido - Fabric - Tissu - Tejido stretch

Fibra- Fiber - Fibre

Visco elástico - Memory foam - Mousse memoire

Espuma - Foam - Mousse

TNT - Nonwoven - Tissu non tissu

Espuma - Foam - Mousse

Mola ensacada - Pocket spring - Ressorts ensachés - Muelles ensacados

TNT - Nonwoven - Tissu non tissu

Espuma - Foam - Mousse

Fibra - Fiber - Fibre

Tecido - Fabric - Tissu - Tejido stretch

90 X 190

140 X 190

150 x 200

160 X 200

180 X 200

* outras medidas sob consulta
other measures on request
autres mesures sur demande
otras medidas bajo pedido

Structura

Ref. 0546-1 - STRUCTURA





Flash

Ref. 0317 **FLASH**



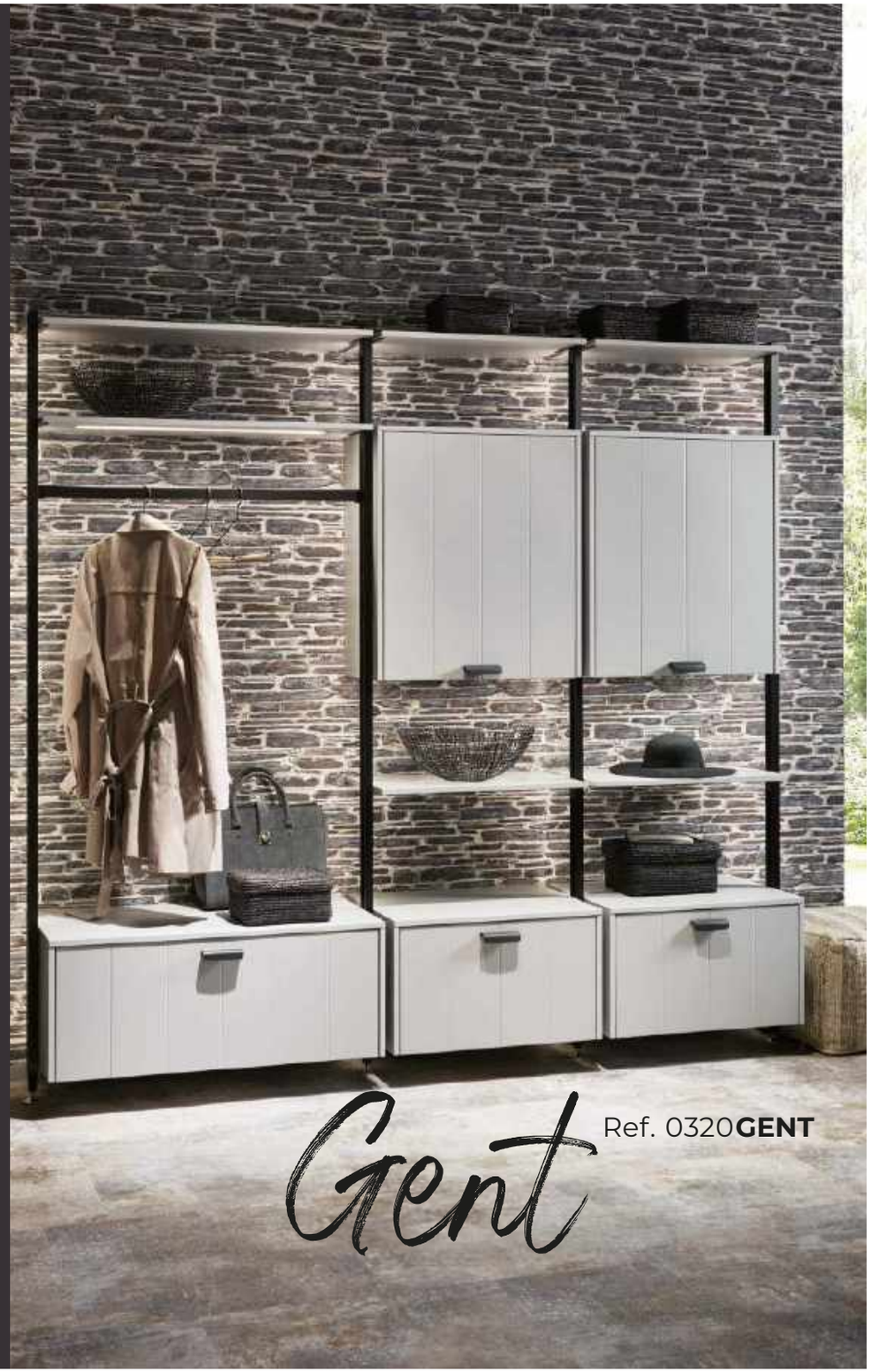

Gent

Ref. 0320 **GENT**

Wilson

Vídeo . Video

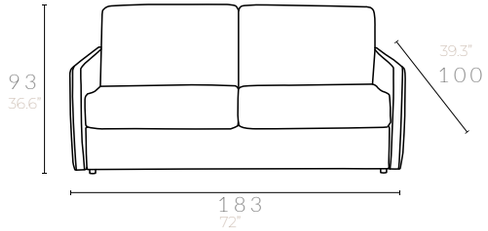





sofá-cama

sofa bed

canapé-lit

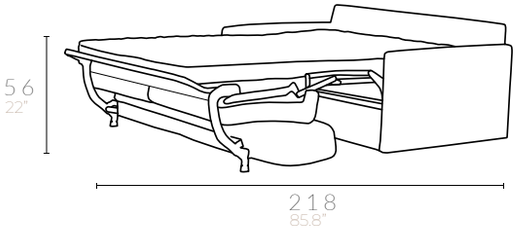

Vasco

Ref. VASCO

Vídeo . Video

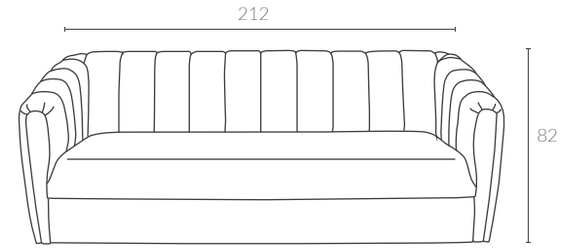





sofá-cama

sofa bed

canapé-lit

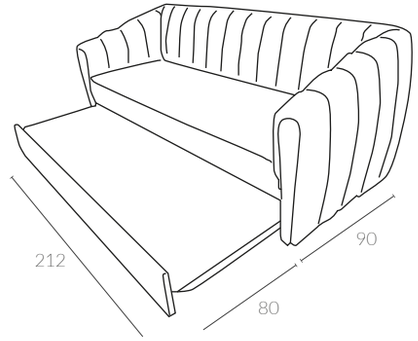

Mosca



MOSCA

Cadeirão estofado com estrutura pintada ou cromada.
Sillon tapizado con estructura pintada o cromada.
Fauteuil garni avec structure teintée ou chromée.
Upholstered armchair with painted or chromed structure.
Gepolsterter sessel mit lackiertem oder verchromtem gestell.

REF.							
001	112	89	83	47	---	0,83/1	21.6









Ref. 001

cadeirão

armchair
fauteuil

Marbella







cadeirão

armchair
fauteuil

Ref. MARBELLA



Ref. SANA





cadeirão

armchair
fauteuil



Taylor 1s

cadeirão

armchair
fauteuil



Ref. TAYLOR 1S









cadeirão

armchair
fauteuil

Taylor 2s







Ref. TAYLOR 2S

banquetas bar

bar stool
tabouret de bar

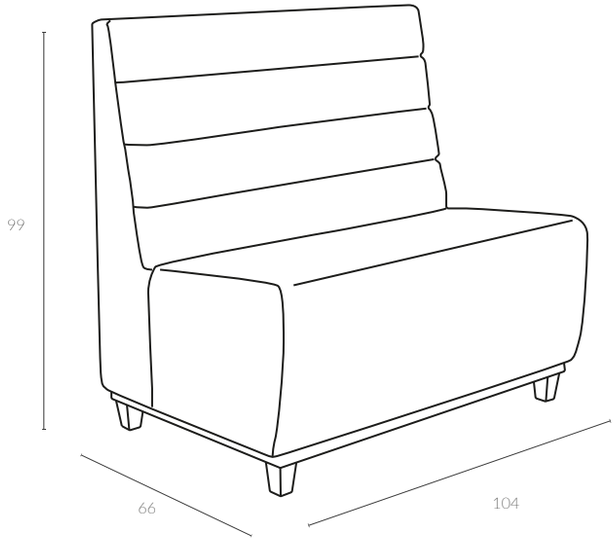



Paris









banquetas bar

bar stool
tabouret de bar

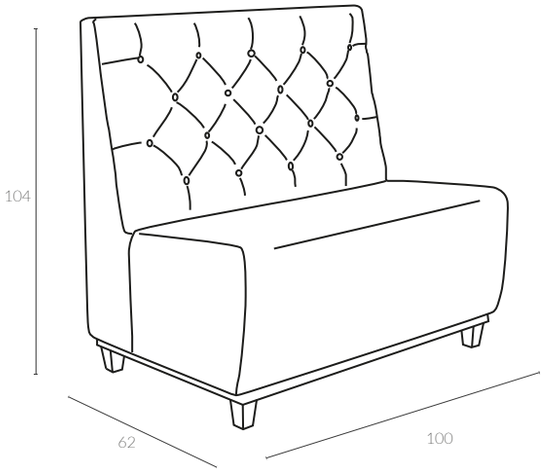







Boton

banquetas bar

bar stool

tabouret de bar

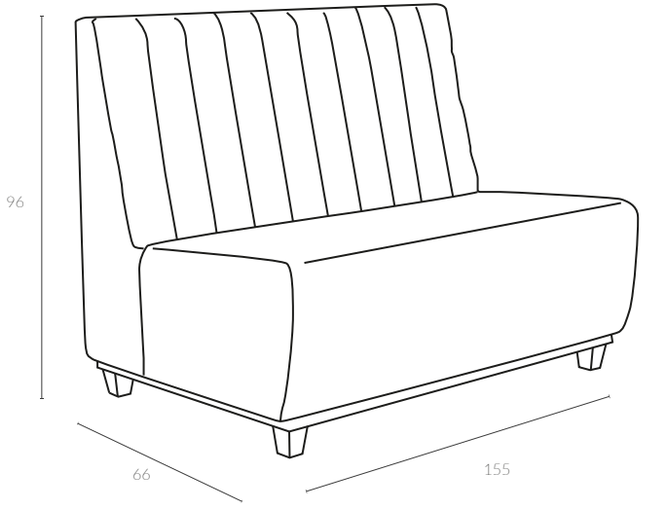









Lusa





Ref. 001







Ref. 004

cadeiras
chairs
chaises

Lusa





LUSA

Cadeira e banco estofados com estrutura pintada ou cromada.
Upholstered chair and stool with painted or chromed structure.
Chaise et tabouret garnis avec structure teintée ou chromée.



Ref. 001



Ref. 011





cadeiras
chairs
chaises



Doa

DOA

Cadeira e banco estofados com estrutura pintada ou cromada.

Upholstered chair and stool with painted or chromed structure.
Chaise et tabouret garnis avec structure teintée ou chromée.



Ref. 011



Ref. 001



cadeiras
chairs
chaises

Doa









Kel

cadeiras
chairs
chaises



Ref. KEL BAR



Ref. KEL 04 LT



Ref. KEL 04 LT MAPLE



Ref. KEL 02 HOLE MAPLE



Ref. KEL FLOW 04 MAPLE

cadeiras
chairs
chaises

Easy









EASY

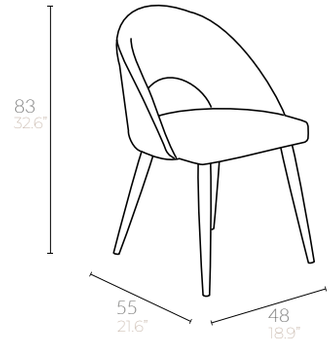

Goma

cadeiras
chairs
chaises



Ref. GOMA LU LT

Ref. GOMA LU HOLE

Ref. GOMA MAPLE LT

Ref. GOMA MAPLE MAD LT

Ref. GOMA MAPLE MAD



Ref. GOMA LU HOLE



Ref. GOMA LU



Ref. GOMA MAPLE

Luggage options



Ref. PM.035B- LUGGAGE 01



Ref. PM.036B - LUGGAGE02



Ref. PM.036B-1 - LUGGAGE03



mesas de refeição

dining tables
tables à manger


ref. d quad


ref. d rect


ref. d red


ref. d oval


ref. gd quad


ref. gd rect


ref. gd oval


ref. sm01 quad


ref. sm 01 rect


ref. sm 01 red


ref. db 01


ref. db 02


ref. db 03


ref. tor 07


ref. tor 06


ref. tor 02


ref. mr08


ref. mr09


ref. mr04


ref. mf06 ref. mra06 ref. mr06


ref. mr05

divisórias

dividers
cloisons





acabamentos disponíveis mesas e cadeiras metálicas

available finishes
for metal tables and chairs

finitions disponibles
pour tables et chaises en métal

METAL • METAL • MÉTAL

3000 BRILHO	3014 BRILHO	3015 MATE	3016 TEXTURADO	3018
3019	3030 TEXTURADO	3032 MATE	3034 MATE	3040 VERNIZ
3042 MATE	3046	3048	3050 MATE	3052
3054	3056 MATE	3058 MATE	3060 MATE	3062 MATE
3063	3064 MATE			

METAL • METAL • MÉTAL

PINTURA ESPECIAL • SPECIAL PAINT • PEINTURE SPÉCIALE

3070	3072	3074	3076





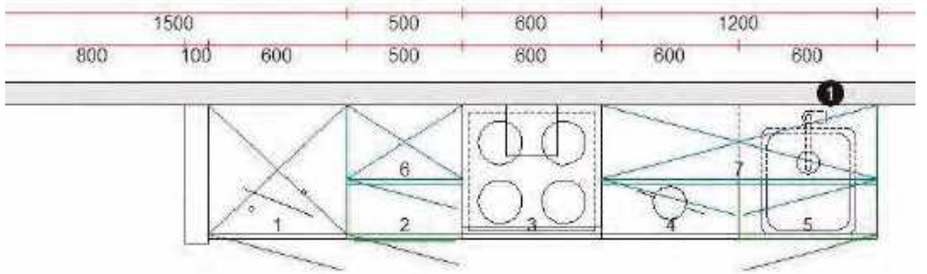

Speed

Ref. SPEED

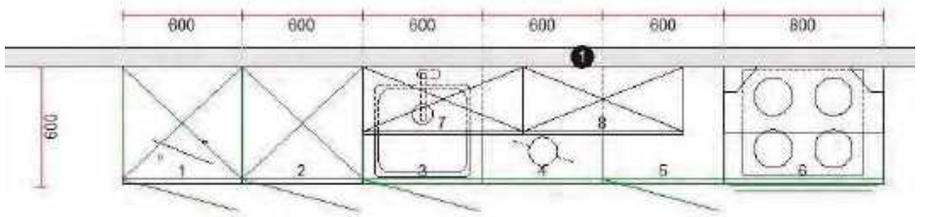

Focus

Ref. FOCUS


escritório
conference room
salle de réunions







escritório

office
bureau

GRUPO | GROUP | GROUPE

Mola Solta | 2Unique

Rua do Alviela Lote 3 - São Pedro
2380-184 Alcanena, Portugal



PORTUGAL

As nossas marcas . Our brands . Nos marques

2-Sleep® Beds and mattress

LITERIE® DE LUXE

EVEN® spiritual dreams

AZIMOD®

www.mola-solta.pt | info@mola-solta.pt
+351 965 300 750 | +351 249 897 020
(chamada para a rede móvel nacional | chamada para a rede fixa nacional)

www.2uniqueview.com | info@2uniqueview.com
+351 962 901 982 | +351 249 010 517
(chamada para a rede móvel nacional | chamada para a rede fixa nacional)

www.azimod.com

CATÁLOGO 2023